REV	Date	Description

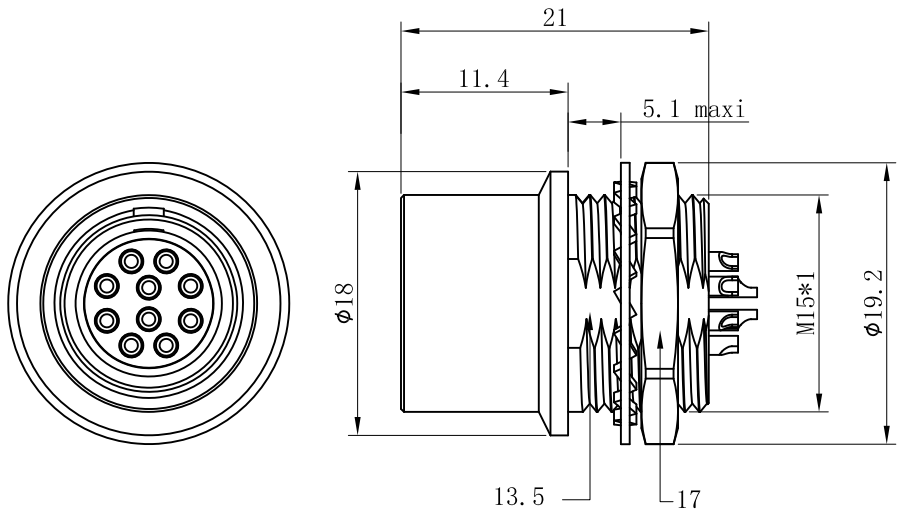

CONNECTOR SOLDER CUP VIEW

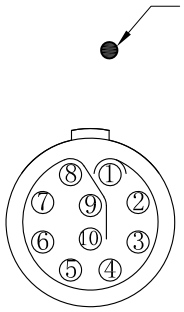

10(ϕ0.9)

CUTOUT

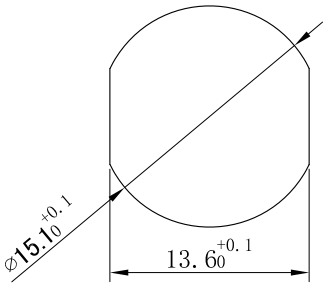

DEG	A	B	C	ANGLE	
0–5	±0.02	±0.05	±0.10	0° –30°	±0.1°
5–10	±0.05	±0.10	±0.15	31° –60°	±0.3°
10–50	±0.10	±0.15	±0.20	61° –90°	±0.5°
50–100	±0.15	±0.20	±0.25		

RM-EHG.2BC.310.KS

DESIGNED		PART NAME	Amitron Electronics, Ltd	MATERIAL	
CHECKED		TYPE	https://amel.ru	2:1	MM A4
APPROVED		DRAWNG	mailbox@amel.ru		2026.7.17 A